# SOK-999-XL
# CUSTOM STEEL OPEN TOP STEP

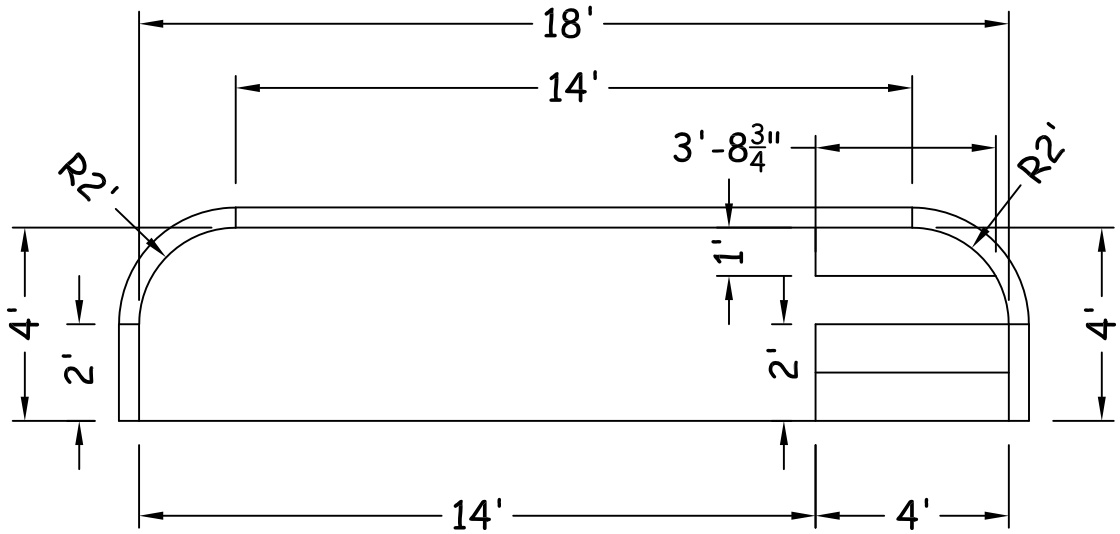


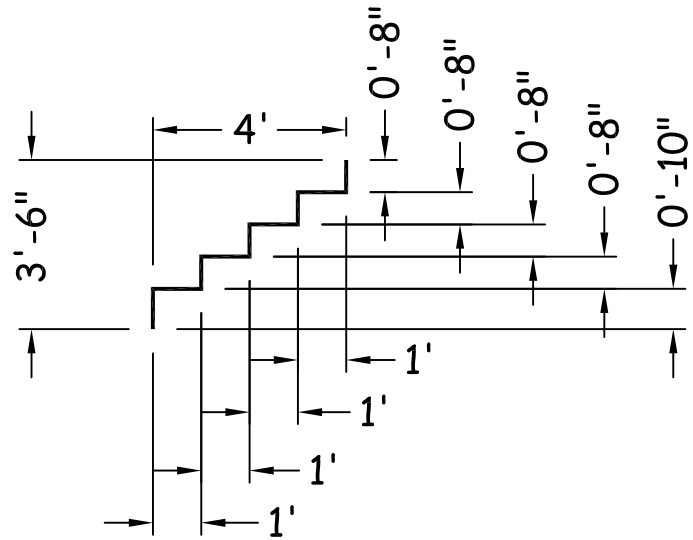


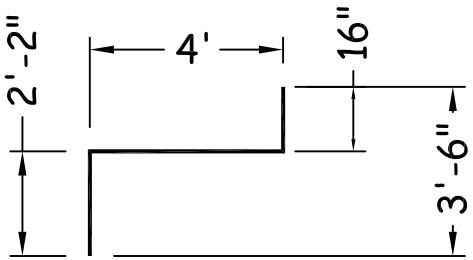


TOTAL SURFACE AREA = 70.3 SQ FT
EXTENDED SURFACE AREA = 59.1 SQ FT
STEEL PERIMETER WALL = 24'-3 3/8"

| | | | | |
|---|---|---|---|---|
| latham The Pool Company | CUSTOMER: SCP/Olive Branch | | | Preliminary Drawing Only<br>Approval required for completion of design. |
| | REF: ROYAL/HUFFMAN | | PO#: | |
| | LNR SQFT: | CVR SQFT: | PERIM: | X_____ |
| DRAWING#: 2020-SPL-17705 | | | DATE: 4/22/2020 | SHEET: 1 OF 1 |